Data Structures and Algorithms

LECTURE 02: LINEAR DATA STRUCTURES

greenwich.edu.vn

UNIVERSITY OF GREENWICH

Alliance with FPT Education

Contents

- Dynamic Arrays
- Nodes
- Stacks
- Queues
- Linked Lists

Dynamic Array - ArrayList

- ArrayList is the **implementation** of ADS list
  - Built **atop an array**, which is able to dynamically **grow** and **shrink** as you **add/remove** elements
  - Stores the **elements** inside an array

```
public class ArrayList<E> implements List<E> {
    private Object[] elements;
}
```

ArrayList - Operations

- Supported operations and complexity:
  - **size()**, **isEmplty()**, **get()**, **set()** – **O(1)**
  - **add()** – the operation runs in **amortized constant** time
  - adding **n** elements requires **O(n)** time
  - all of the other operations like: **add(int index, E element)**, **contains()**, **indexOf(), remove(int index) etc**., run in **linear time O(n)** (roughly speaking)

ArrayList – Add O(n)

- Implemented **using an array**
- Adding **new item** requires **new array**

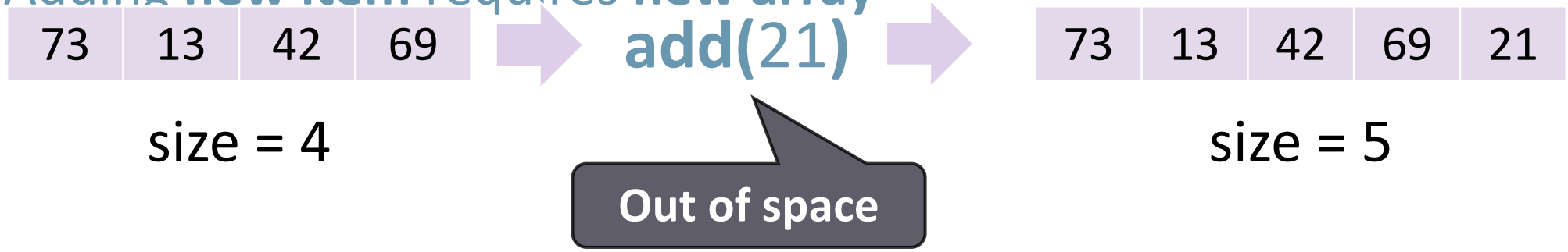

- This approach will copy **all the elements** for each add operation – **O(n)**

ArrayList – Add O(1)

- Implemented **using an array**
- When **adding**, if needed **double** the size

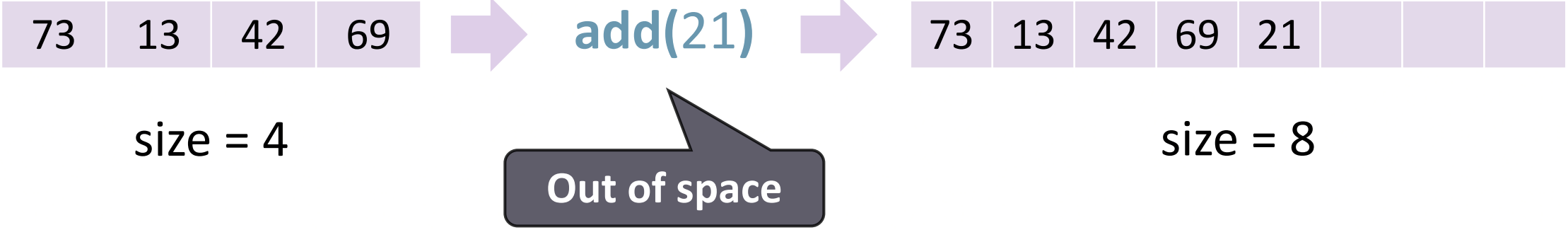

- This approach will copy at **log(n)** → n = 10^9, only ~33 copies – **O(1) amortized**

Problem: ArrayList

- Create an **ArrayList<E>** data structure, which supports
  - boolean **add**(T element)
  - E **get**(int index)
  - E **set**(int index, E elements)
  - E **remove**(int index)
  - int **size**()
  - int **indexOf**(E element)
  - etc…

ArrayList – Constructor And Fields

- Constructor and fields:

```
public class ArrayList<E> implements List<E> {
    private static final int DEFAULT_CAPACITY = 4;
    private Object[] elements;
    private int size;

    public ArrayList() {
        this.elements = new Object[DEFAULT_CAPACITY];
    }
}
```

ArrayList – Add

- Adds an element after the last element:

```
public boolean add(E element) {
    if(this.size == this.elements.length) {
        this.elements = grow();
    }
    this.elements[this.size++] = element;
    return true;
}
```

ArrayList – Get

- Returns an element at index:

```
public E get(int index) {
    checkIndex(index);
    return this.getElement(index);
}

private E getElement(int index) {
    return (E) this.elements[index];
}
```

ArrayList – Set

- Sets an element at index:

```
public E set(int index, E element) {
    checkIndex(index);
    E oldElement = this.getElement(index);
    this.elements[index] = element;
    return oldElement;
}
```

ArrayList – Remove

- Removes and returns an element at index:

```
public E remove(int index) {
    this.checkIndex(index);
    E element = this.getElement(index);
    this.elements[index] = null;
    this.size--;
    shift(index);
    ensureCapacity();
    return element;
}
```

ArrayList – Grow and Shrink

- Helper methods to sustain correct array behaviour:

```
private Object[] grow() {
    return Arrays.copyOf(this.elements, this.elements.length * 2);
}


private Object[] shrink() {
    return Arrays.copyOf(this.elements, this.elements.length / 2);
}
```

ArrayList – Other Operations

- **indexOf**(E element) – returns the **zero** based index of an element or **-1**
- **contains**(E element) – returns **whether** an element is present
- **size**() – returns the **number** of elements
- **toArray**() – returns the elements **as an array**
- Implement other operations – think about the complexity

Nodes

- The **Node** class is the **build block** for many data structures
- Inside Node object we store **an element and pointer to the next node at least**
- However, we **can store anything else**

```
private static class Node<E> {
    private E element;          // Must have
    private Node<E> next;       // Must have
    private Node<E> previous;   // Additional
}
```

Node - Application

- Many data structures use **node chaining**

```
public class LinkedList<E> implements Deque<E> {
    private Node<E> head;

}
```

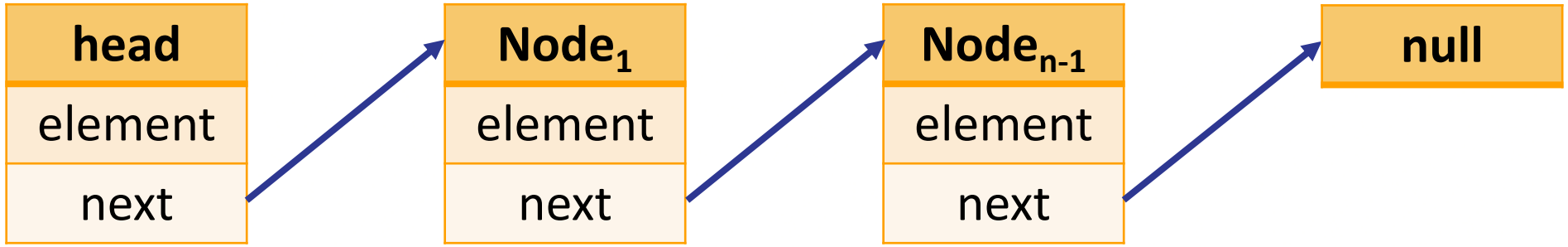

Problem: Node

- Create a class **Node<E>**, that has:
  - **E** element
  - **Node**<E> next
  - **Constructor**

```
private static class Node<E> {
    private E element;
    private Node<E> next;

    public Node(E value) {
        this.element = value;
    }
}
```

Stack

- Stack is the **implementation** of ADS **LIFO** Last **I**n **F**irst **O**ut
  - Build by using **Node** class or atop an **array**
- Stack example using Node

```
public class Stack<E> implements AbstractStack<E> {
    private Node<E> top;
    private int size;

}
```

Stack - Operations

- Supported operations and complexity:
  - **size**(), **isEmplty**(), **push**(), **pop**(), **peek**() – **O(1)**
  - all of the other operations run in linear time (roughly speaking):
    - **forEach**()
    - **contains**()
    - etc…

Stack – Constructor And Fields

- Constructor and fields:

```
public class Stack<E> implements AbstractStack<E> {
    private Node<E> top;
    private int size;

    private static class Node<E> {...}   // Node class


    public Stack() {
    }
}
```

Stack – Push

- Chain the nodes by using the **top** field:

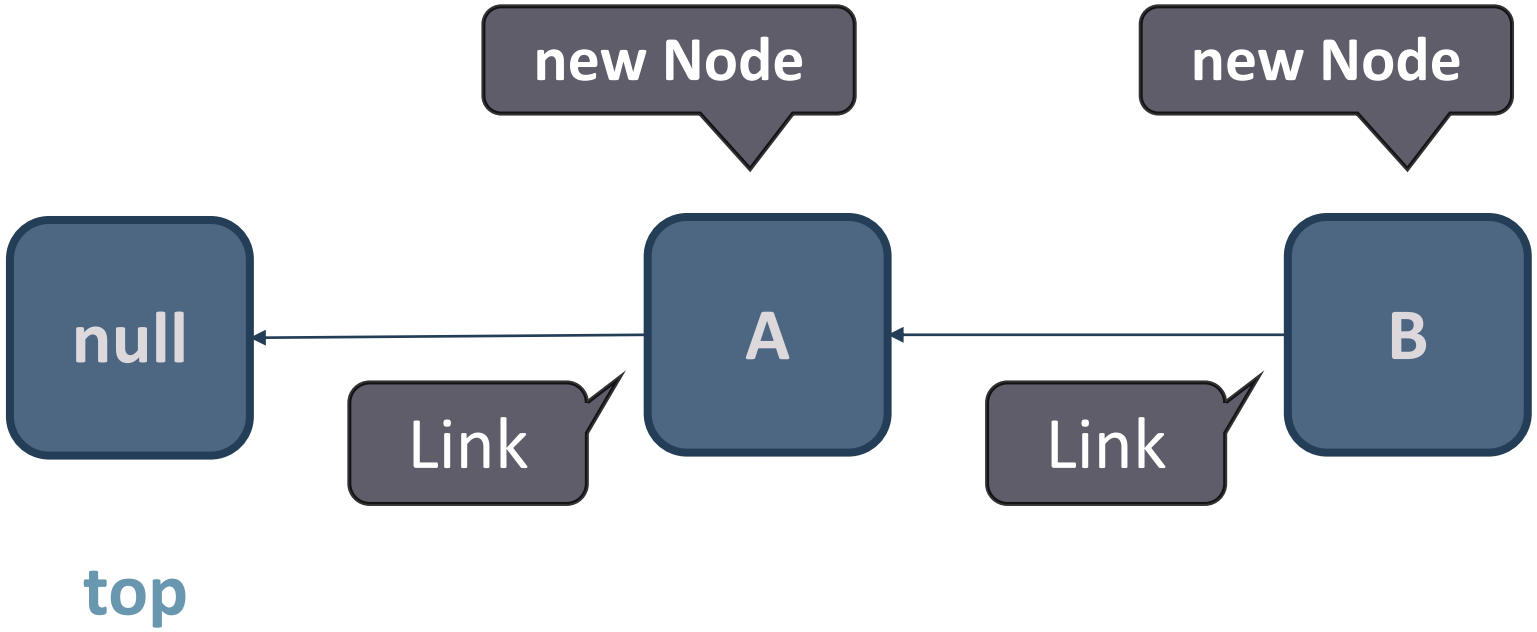

Stack – Push

- Add element at the top
  - **Link** the nodes and **increment** size

```
public void push(E element) {
    Node<E> newNode = new Node<>(element);
    newNode.previous = top;
    top = newNode;
    this.size++;
}
```

Stack – Pop

- Remove the **top** Node and return the element
  - **Unlink** the nodes and **decrease** size

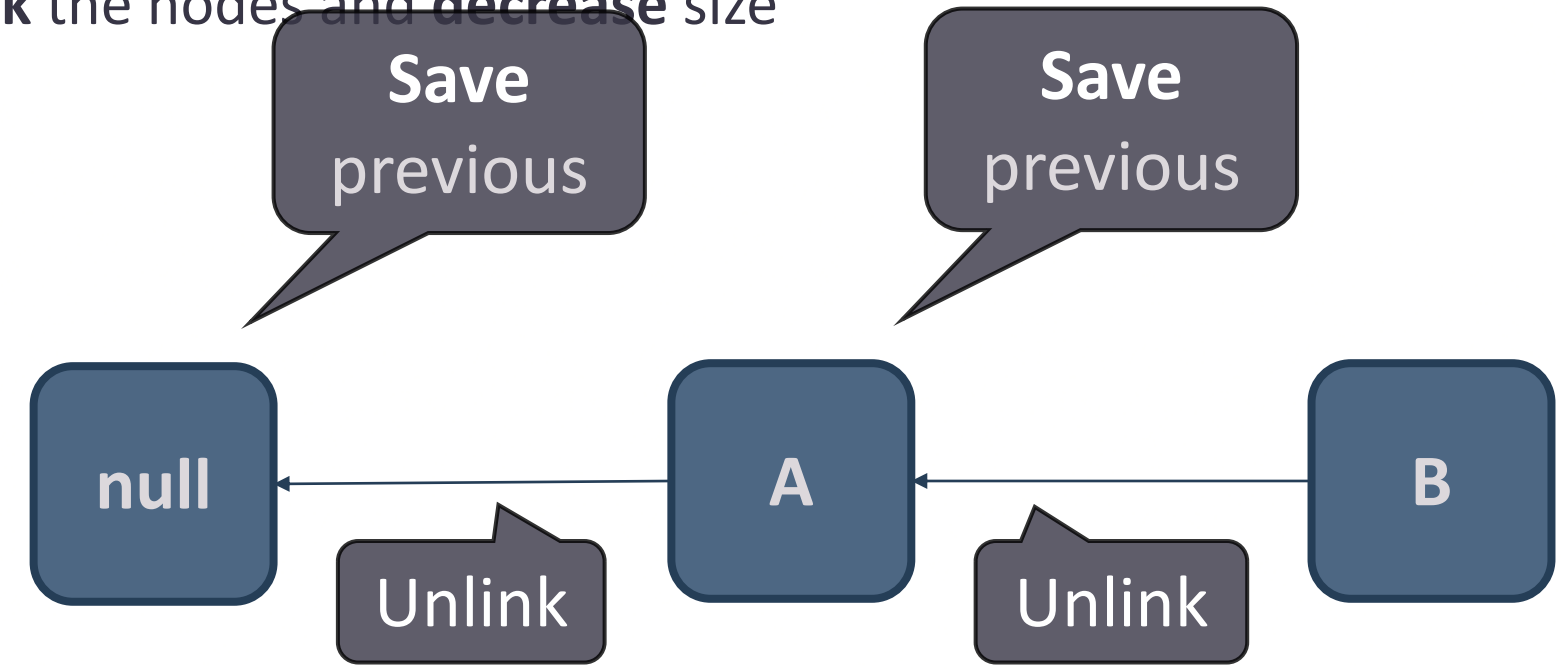

Stack – Pop

- Remove and return element at the top:

```
public E pop() {
    ensureNonEmpty();
    E element = this.top.element;
    Node<E> temp = this.top.previous;
    this.top.previous = null;
    this.top = temp;
    this.size--;
    return element;
}
```

Queue

- Queue is the **implementation** of ADS **FIFO (F**irst **I**n **F**irst **O**ut)
  - Build by using **Node** class or atop an **array**
- Queue example using Node

```
public class Queue<E> implements AbstractQueue<E> {
    private Node<E> head;
    private int size;

}
```

Queue - Operations

- Supported operations and complexity:
  - **size**(), **isEmplty**(), **poll**(), **peek**() – **O(1)**
  - **offer**():
    - if we keep the reference to the that node – **O(1)**
    - If we have to chase pointers to that node – **O(n)**
  - all of the other operations run in linear time (roughly speaking):
    - **forEach**(), **contains**(), etc…

Queue – Constructor And Fields

- Constructor and fields:

```
public class Queue<E> implements AbstractQueue<E> {
    private Node<E> head;
    private int size;

    private static class Node<E> {...}   // Node class


    public SimpleQueue() {
    }
}
```

Queue – Offer

- Head == null → head = **new Node**
- Size > 0 → chain the nodes by adding **new Node** after the last one the so called **tail**:

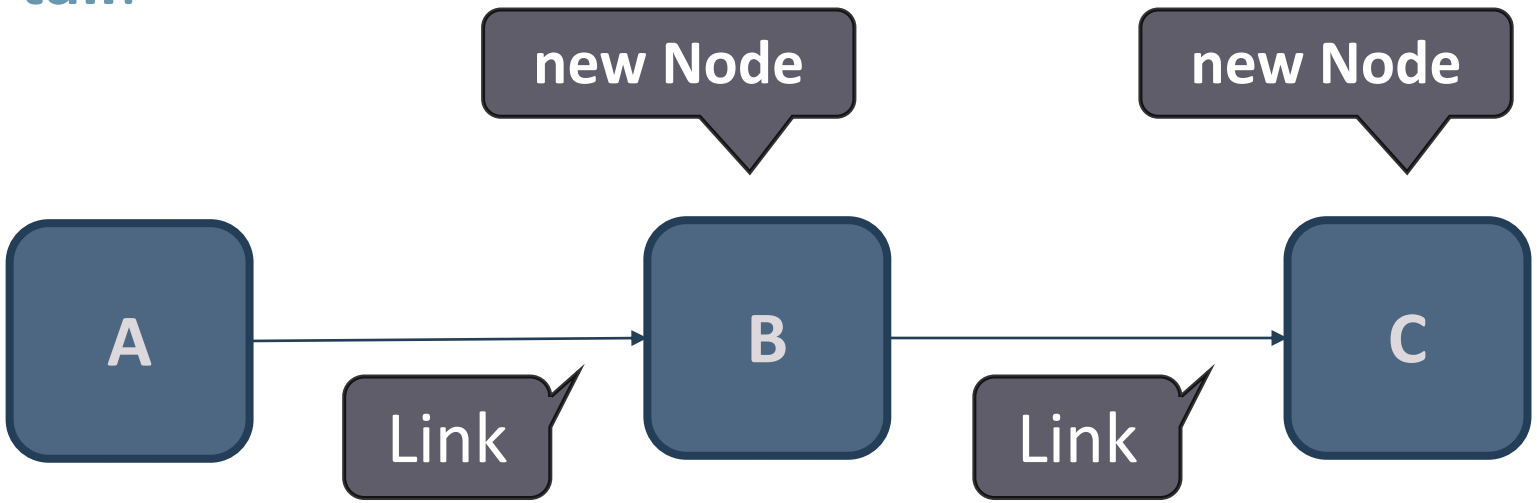

Queue – Offer

- Add element at the end – **Link** the nodes and **increase** size

```
public void offer(E element) {
    Node<E> newNode = new Node<>(element);
    if (this.head == null) {
        this.head = newNode;
    } else {
        Node<E> current = this.head;
        while (current.next != null) {
                current = current.next;
        }
        current.next = newNode;
    }
    this.size++;
}
```

Queue – Poll

- Remove the **head** Node and return the element
  - **Unlink** the node and **decrease** size

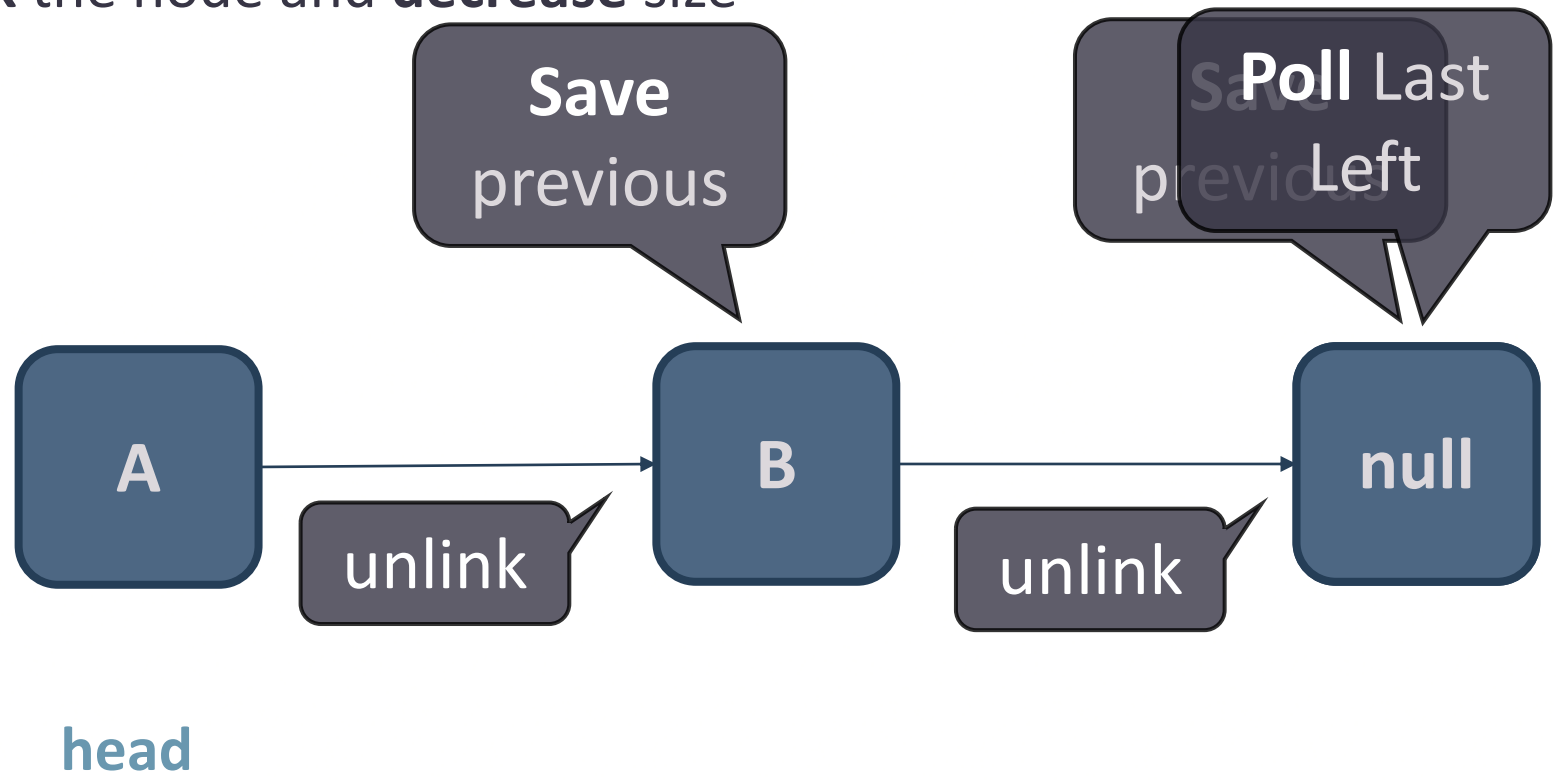

Stack / Queue – Real-World Applications

- Stack
  - Undo operations
    - Browser history
    - Chess game progress
  - Math expression evaluation
  - Implementation of function (method) calls
  - Tree-like structures traversal (DFS algorithm)
- Queue
  - Operation system process scheduling
  - Resource sharing, e.g.:
    - Printer document queue
    - Server requests queue
  - Tree-like structures traversal (BFS algorithm)

Linked Lists

Linked Lists

- A collection of nodes storing data and links to other nodes
- A **linear** DS composed of nodes
  - Each node holds some info and reference to another node in the list
- Types of linked lists
  - Singly-linked list
  - Doubly-linked list

SinglyLinkedLists

- Linear data structure where each **element** is a **separate object – Node**
- The elements are **not** stored at **contiguous** memory
- The entry point is commonly the **head** of the list
- However we define what is the entry point

```
public class SinglyLinkedList<E> implements LinkedList<E> {
    private Node<E> head;
    private int size;
}
```

Singly Linked List – Operations

- Supported operations and complexity:
  - **addFirst**(), **removeFirst**(), **getFirst**(), **size**() – **O(1)**
  - How about operations on the **last element**?
    - **addLast**(), **removeLast**(), **getLast**() – again depends if we keep the reference to the last node or no can be constant – **O(1)** or linear – **O(n)**
  - operations that **index** into the list will run in **linear time O(n)** (roughly speaking)

Singly LinkedList – Constructor And Fields

- Constructor and fields:

```
public class SinglyLinkedList<E> implements LinkedList<E> {
    private Node<E> head;
    private int size;

    private static class Node<E> {...}   // Node class

    public LinkedList() {
    }
}
```

Singly Linked List – Adding Last

- Head == null → head = **new Node**
- Size > 0 →

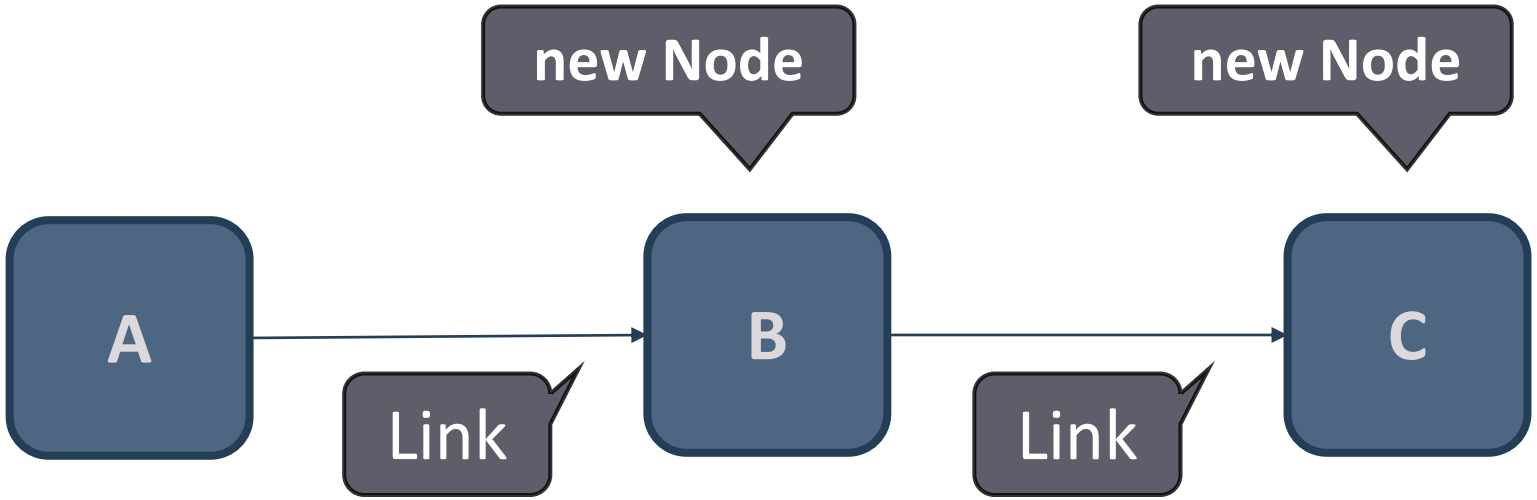

LinkedList – Add Last

- Add element at the end:

```
public void addLast(E element) {
    Node<E> newNode = new Node<>(element);
    if (this.head == null) {
        this.head = newNode;
    } else {
        Node<E> current = this.head;
        while (current.next != null) {
            current = current.next;
        }
        current.next = newNode;
    }
    this.size++;
}
```

Singly Linked List – Adding First

- Head == null → head = **new Node**
- Size > 0 →

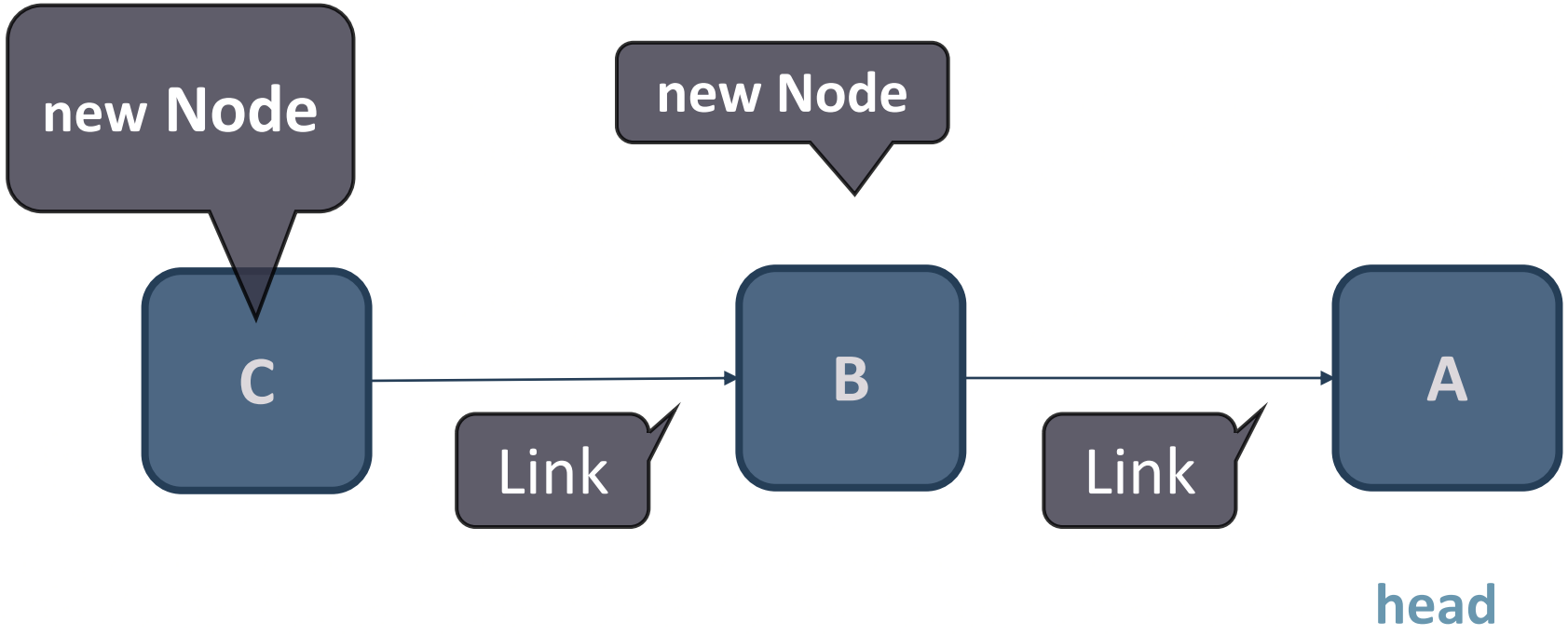

LinkedList – Add First

- Add element at the beginning:

```
public void addFirst(E element) {
    Node<E> newNode = new Node<>(element);
    if (this.head != null) {
        newNode.next = this.head;
    }
    this.head = newNode;
    this.size++;
}
```

Linked List – Removing First/Last

- Size == 0 → Do Nothing / Throw Exception
- Size == 1 → head = null
- Size > 1

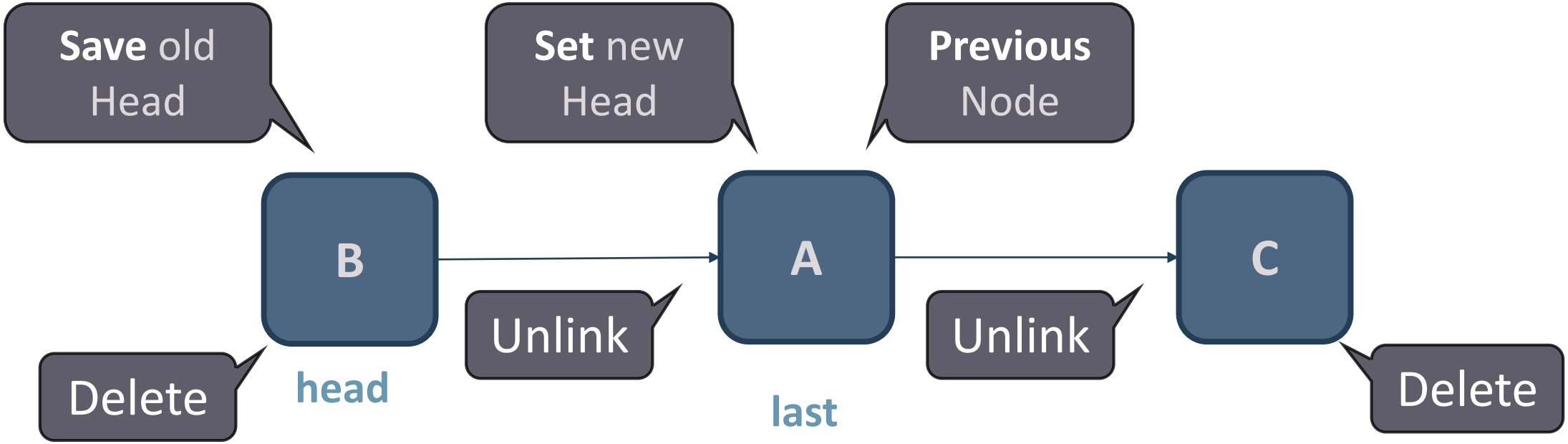

Doubly-Linked Lists

- In doubly linked list, each node has two reference fields
  - one to the successor and
  - one to the predecessor

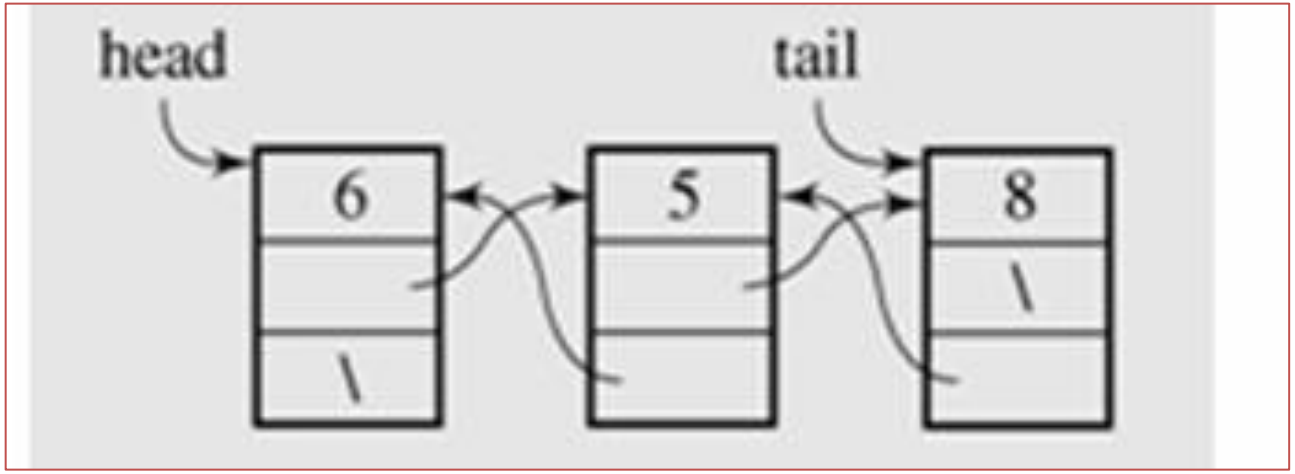

Doubly-Linked Lists

- Advantages over Singly-linked Lists:
  - Quick update operations: such as: insertions, deletions at *both* ends (head and tail), and also at the middle of the list.
  - A node in a doubly-linked list store two references:
  - A ***next*** link; that points to the next node in the list, and
  - A ***prev*** link; that points to the previous node in the list.

Doubly-Linked Lists - Sentinel Nodes

- To simplify programming, two special nodes have been added at both ends of the doubly-linked list.
- Head and tail are dummy nodes, also called sentinels, do not store any data elements.
- Head: header sentinel has a ***null-prev*** reference (link).
- Tail: trailer sentinel has a ***null-next*** reference (link).

Douby-linked List

A doubly-linked list object would need to store the following:

1. Reference to sentinel head-node;
2. Reference to sentinel tail-node; and
3. Size-counter that keeps track of the number of nodes in the list (excluding the two sentinels).

Douby-linked List

Empty Doubly-Linked List:

Using sentinels, we have no null-links; instead, we have:

head.next = tail

tail.prev = head

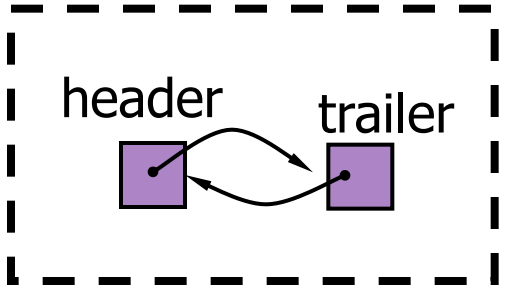

Single Node List:

Size = 1

This single node is the first node, and also is the last node:

first node is head.next

last node is tail.prev

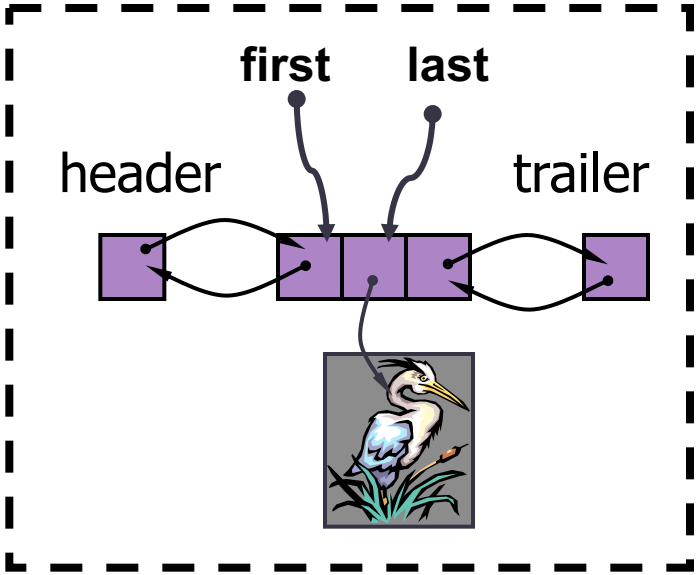

Insertion into a Doubly-Linked List

1. AddFirst Algorithm

To add a new node as the first of a list:

Algorithm addFirst()

```
new(T)
T.data ← y
T.next ← head.next
T.prev ← head
head.next.prev ← T    {Order is important}
head.next ← T
Size++
```

This Algorithm is valid also in case of empty list.

Insertion into a Doubly-Linked List

2. AddLast Algorithm

To add a new node as the last of list:

Algorithm addLast()

```
new(T)
T.data ← y
T.next ← tail
T.prev ← tail.prev
tail.prev.next ← T          {Order is important}
tail.prev ← T
Size++
```

This Algorithm is valid also in case of empty list.

Removal from a Doubly-Linked List

3. RemoveLast Algorithm

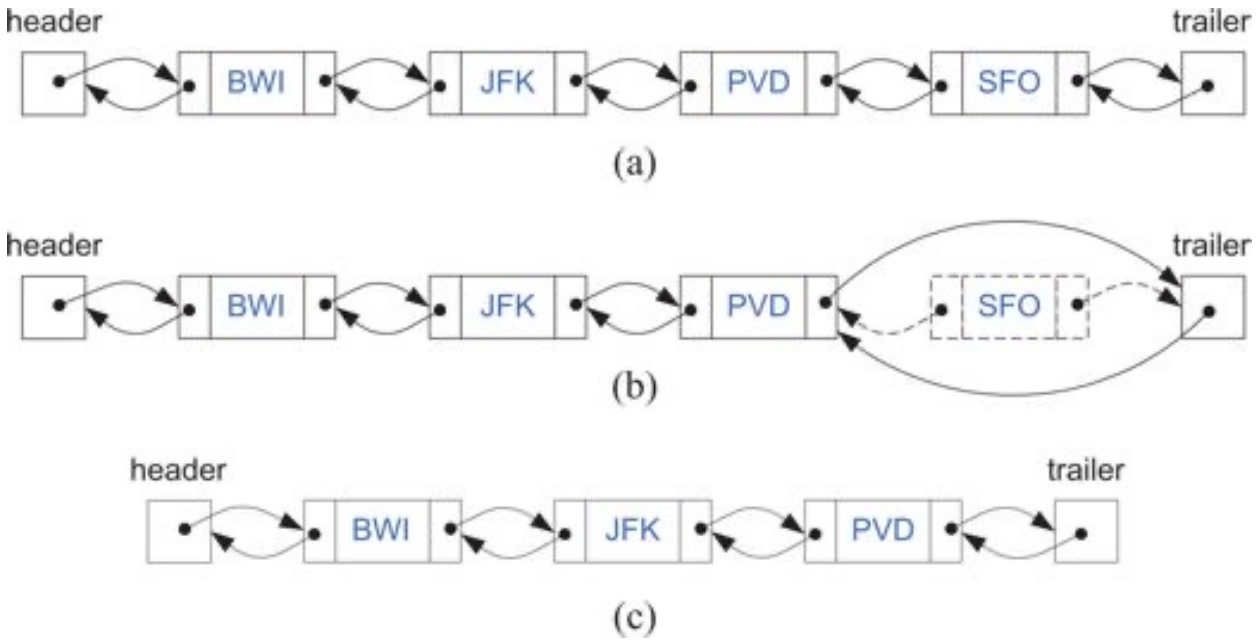

Notice that before removal, we must check for empty list. If not, we will remove the last node in the list, as shown in Figure above.

Removal from a Doubly-Linked List

Algorithm removeLast()

```
If size = 0 then output "error"
        else { T ← tail.prev
               y ← T.data
               T.prev.next ← tail
               tail.prev ← T.prev
               delete(T)                {garbage collector}
              size--
              return y
              }
```

This algorithm is valid also in case of a single node, size=1, in which case we'll get an empty list. Algorithm is one statement.

Doubly-Linked List - Insertion

- We visualize operation AddAfter(p, X), which returns position q

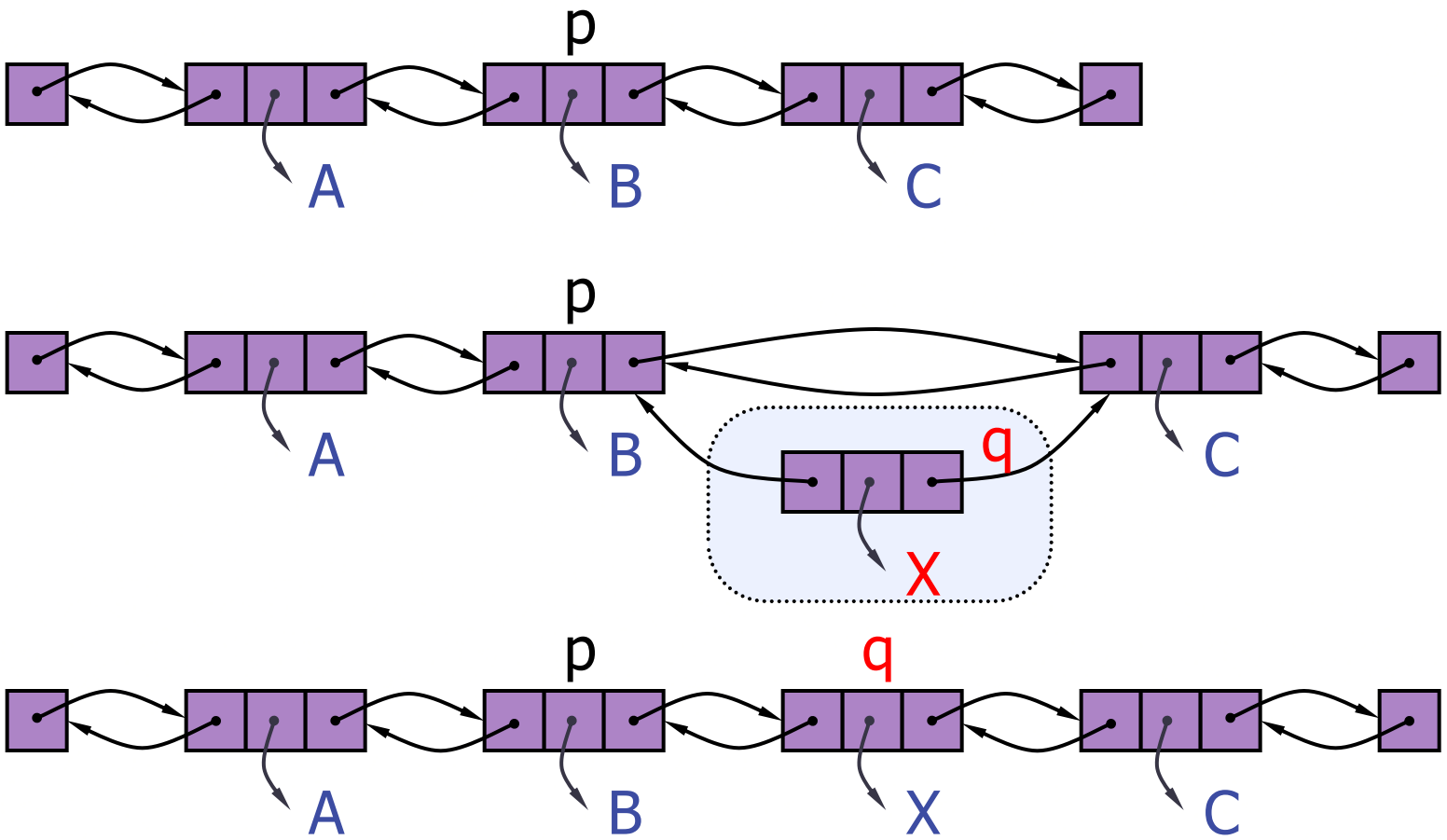

Doubly-Linked List - Insertion

Algorithm insertAfter(*p*,*e*):

Create a new node *v*

v.setElement(*e*)

v.setPrev(*p*) {link *v* to its predecessor}

v.setNext(*p*.getNext()) {link *v* to its successor}

(*p*.getNext()).setPrev(*v*) {link *p*'s old successor to *v*}

p.setNext(*v*) {link *p* to its new successor, *v*}

return *v* {the position for the element *e*}

Doubly-Linked List - Deletion

- We visualize remove(p), where p = last()

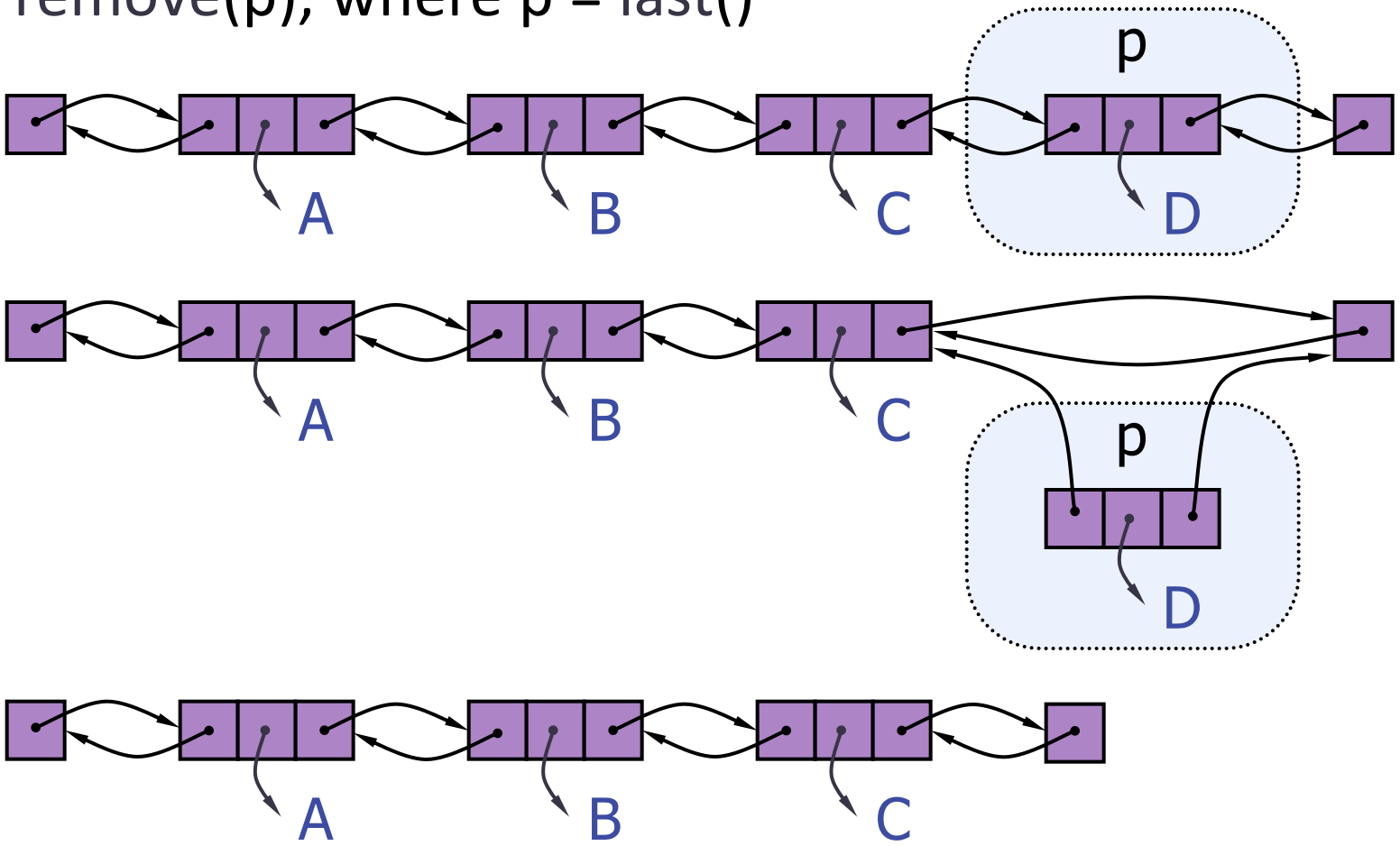

Doubly-Linked List - Deletion

Algorithm remove(*p*):

t = *p*.element {a temporary variable to hold the return value}

(*p*.getPrev()).setNext(*p*.getNext()) {linking out *p*}

(*p*.getNext()).setPrev(*p*.getPrev())

p.setPrev(**null**) {invalidating the position *p*}

p.setNext(**null**)

return *t*

Doubly-Linked List - Performance

- In the implementation of the List ADT by means of a doubly linked list
  - The space used by a list with n elements is $O(n)$
  - The space used by each position of the list is $O(1)$
  - All the operations of the List ADT run in $O(1)$ time
  - Operation element() of the Position ADT runs in $O(1)$ time

Node Implementation

- So far we have implemented some Data Structures by using the **Node class properties**. However the way we did it **introduces** some **performance problems** when **chaining** nodes.
- **Can** we **solve** them?
- Add/Remove/Get in **constant time**?
- We will try to **understand** and **solve** those **problems** at the exercise.

Summary

- Stack is **LIFO** structure (**L**ast **I**n **F**irst **O**ut)
  - Linked implementation is pointer-based
- Queue is **FIFO** (**F**irst **I**n **F**irst **O**ut) structure
  - Linked implementation is pointer-based
- LinkedList
  - Linked implementation is pointer-based